EPS
Egg Production Systems by Gilac

FICHE TECHNIQUE

PALETTE

1200 X 900 X 160 mm

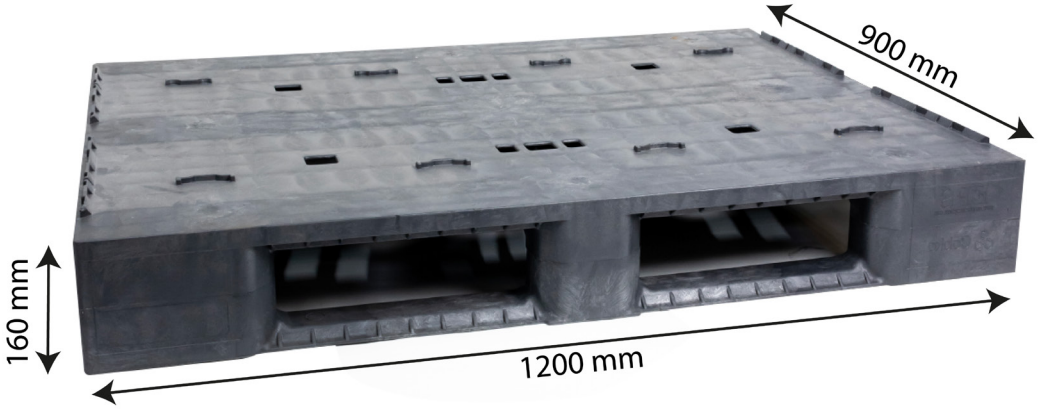

POIDS
17 kg
+/- 0,5 kg

DIMENSIONS
1200 X 900
X 160 mm
+/- 6 mm

MATIÈRE

PEHD PP

PP & PEHD

Propriétés techniques
& certificats alimentaires
Informations complémentaires
pages suivantes

CONDITIONNEMENT

QUANTITÉ PAR PALETTE
15

PALETTE BOIS 900 X 1200
COIFFE POUR PALETTE
FILM
HAUTEUR 2,40 m

PERSONNALISATON

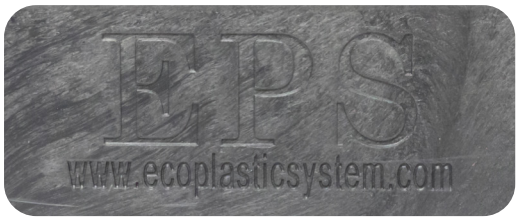

GRAVURE	sur demande
COULEUR	sur demande

EPS

Egg Production Systems by Gilac

PRODUCT DATASHEET

PALLET

1200 X 900 X 160 mm

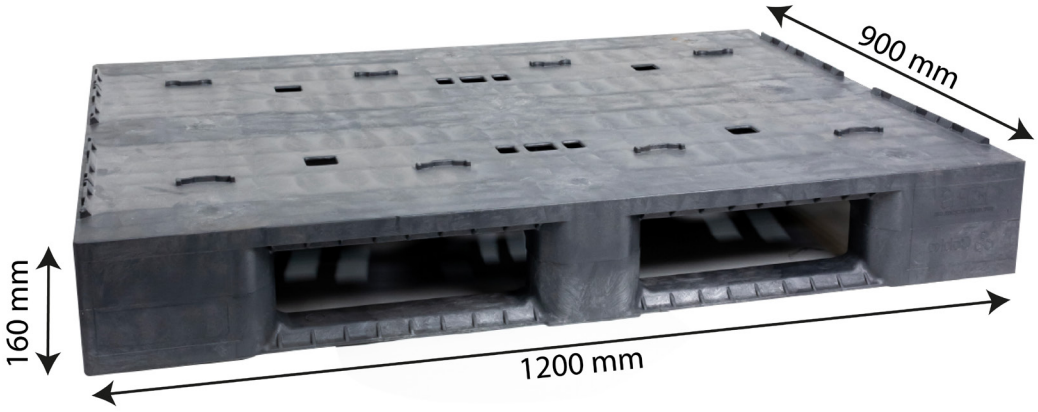

WEIGHT

17 kg

+/- 0,5 kg

DIMENSIONS

1200 X 900 X 160 mm

+/- 6 mm

MATERIAL

HDPE PP

PP & HDPE

Technical specifications & food certificates

Additional information on the next pages

PACKING UNIT

QUANTITY PER PALLET

15

WOODEN PALLET 900 X 1200
PALLET COVER
PLASTIC FILM
HEIGHT 2.40 m

CUSTOMISATION

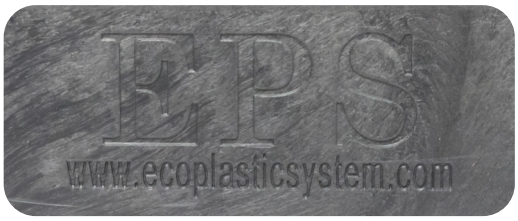

ENGRAVE	on demand
COLOUR	on demand

EPS

Egg Production Systems by Gilac

PRODUCT DATASHEET

PALLET

1200 X 900 X 160 mm

BOTTOM SUPPORT	LOAD CAPACITIES (KG)		
	Static	Dynamic	Racking
3 RUNNERS	4400	2200	1100

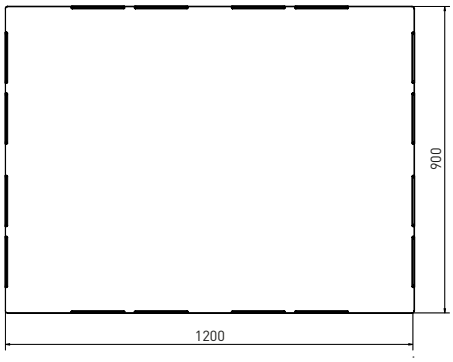

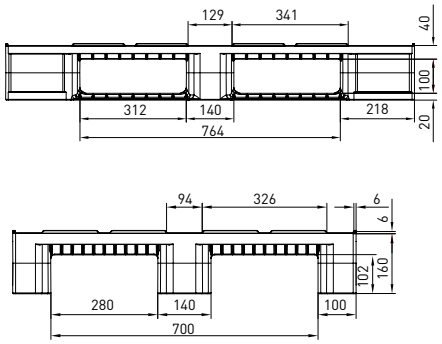

Cabka NV · Rozendaalstraat 101 · 8900 Ypres · Belgium

Personal / Confidential

Cabka NV
Rozendaalstraat 101
8900 Ypres | Belgium
+32 57 2291 10
cabka.com

Contact Person
Martin.braekevelt@cabka.com
+32 471185616

Ypres, 01.03.2023

"Certificate of Compliance of Cabka NV Ieper products to the EC Directives concerning plastic articles intended to come into direct contact with foodstuffs"

Introduction

Below is an overview of the most important standards and guidelines that apply to the use and production of pallets.

Producer: CABKA nv
Rozendaalstraat, 101,
B – 8900 Ieper
VAT n°:BE 0430184706

1. Food contact

1.1 Following articles are covered by this Declaration of Compliance

Pallets and Boxes in PP or HDPE in virgin material

In sizes and versions as described in the Cabka technical leaflets

Including Antislip Tape and grommets

Products: Hygienic Pallets 1200x1000 and 1200x800

Endur pallets

Eco pallets

Pallet boxes

1.2 All concerned articles meet the relevant requirements of following documents:

- The general directive 1935/2004 EC and her amendment 2023/2006 (see latest consolidated version in table 1.)
- The old plastic directive 90/128EC and all her amendments.
- The plastic directive 2011/10 EC harmonizing the 2002/72 EC with all her amendments : 2004/1-EC, 2004/19-EC, 2005/79-EC, 2007/19-EC, 2008/39-EC, 2011/1282-EC, 2012/1183-EC, 2014/202-EC, 2015/174-EC, 2019/37-EC
- 2006 (see latest consolidated version in table 1.)

These articles are made of virgin PP or HDPE and additives, all full filling the requirements of the directives, with respect, to the presence on the lists of accepted substances of above mentioned directives, and confirmed by the suppliers of the raw materials. *(cfr MSDS files of material suppliers)*

- Cabka products are made from positive list materials
- Migration tests global (GMT) and specific (SMT) migration tests.

1.3 Intended use of the articles:

The articles can be used in contact with food at temperatures up to 40°C
Food stuffs: dry food, aqueous food, acidic food, alcoholic food and fatty food.
The Container Boxes are mainly used to store fresh dry vegetables, potatoes etc...
In this case, no migration test is required, according to the directives.
Nevertheless, total migration tests are conducted.

1.4 Migration tests:

The total migration tests are carried out in following conditions, on a regular base:
(2023 : from 16/12/2022 till 19/01/2023).

Table 1 : selected simulants and test conditions

Used Similants	Test conditions
Simulant A: 10% (v/v) ethanol	10 days at 40°C (OM2)
Simulant B : 3% acetec acid (m/v)	
Simulant D2 : ethanol 95% (v/v) instead of vegetable oil	
Simulant D2: isooctane instead of vegetable oil	2days at 20°C
Simulant E: Tenax® (modified polyphenylene oxide)	10 days at 40°C

Results of total migration tests:

Total migration < 10 mg/ dm2 (full fills requirement)

All types of foodstuffs at long term contact at room temperature or below are possible.

The testing for specific migration is not applicable as according to the SML lists none of the additives needs SML tests.

1.5 Case of Pallets, Boxes and Lids in recycled PP or HDPE :

These products are manufactured using generally food grade, but recycled materials. As there is always an uncontrollable factor, it is not possible to certify their conformity to the above mentioned directives. The use of recycled plastics is governed by the new directive 282/2008 EC . (see latest consolidated version in table 1.)

A risk analysis document has been made by Cabka NV Ieper. The conclusion is that the Cabka NV Ieper recycled products can be safely used without restriction in the case of packed food, and for direct food contact in the case of dry food.

2. *Packaging directive*

The pallets, boxes and lid comply with the European packaging directive 94/62/EC this means, among other things, that the total concentrations of lead, cadmium, mercury and hexavalent chromium in packaging and packaging components do not exceed 100 ppm weight.

Prime material: see MSDS chips suppliers

Recycled material: certificates suppliers or internal controle in lab (cfr XRF analyses).

3. *Directive 2009/48/EC*

Directive on the safety of toys:

Relates to absence of

- Heavy metal
- Plasticizers (DEHP, ...)

- Bisphenol A

Is covered by using prime materials, of which certificates are made available by suppliers.

4. *REACH (Regulation (EC) No 1907/2006)*

Materials used comply with the REACH directive: notification obligation at concentrations >1000mg/kg (annex 14); + specific requirements from restricted list (annex 17).

List updated 2 times a year: (See table 1).

5. *Use of Production Scrap (post industrial) / Post Consumer*

- The use of such materials supports sustainability.
- Use of such materials depends on the applications:
    - Used in the applications where the use is permitted.
    - Sometimes other criteria have to be chosen: where food safety is important, the use of recycled materials will usually not be possible.

Regulation	Current validation version
1935/2004/EC	27/03/2021
2023/2006/EC	17/04/2008
10/2011/EC	23/09/2020
2002/72 /EC	23/09/2021
282/2008/EC	26/10/2015
94/62/EC	04/07/2018
REACH 1907/2006/EC	17/12/2022
2009/48/EC	05/07/2022

Table 1.

Sustainability at Cabka

It is important for sustainability within Cabka that emphasis is placed on the fact that **recycled material is used where possible and that the products are recyclable again.**

Cabka has a ECOVADIS certificate at group level.

→ Cabka products do not fall under the most acute problems (see, among other things, plasticizers orthophthalates in PVC, ...)

→ Heavy metals and such are monitored.

Kind regards,
For Cabka NV

Martin Braekevelt
Global Quality Director

Cabka N.V.
Rozendaalstraat 101 – 8900 IEPER – Belgium – Tel. +32 57 229 110 – ieper@cabka.com – BTW BE 0430 184 706 – RPR Ieper
BNP Paris Fortis: BE59 2850 4249 5426 – GEBABEBB – ING: BE81 3850 5239 5524 – BBRUBEBB – KBC Bank NV: BE27 4721 0176 2173 – KREDBEBB – Belfius: BE02 5645 1362 9740 – GKCCBEBB **Member of the Cabka Group – cabka.com**